GSC-Tech Corp.
Microwave Group

Patch Antenna

DSP-25-2

Appearance

Specification	
Frequency Range	1575.42MHz
Band With	⩾5MHz
V.S.W.R	⩽2.0
Gain	3dBic typical
Axial Ratio	3dB max
Polarization	Right-hand circular polarization
Impedance	50Ω
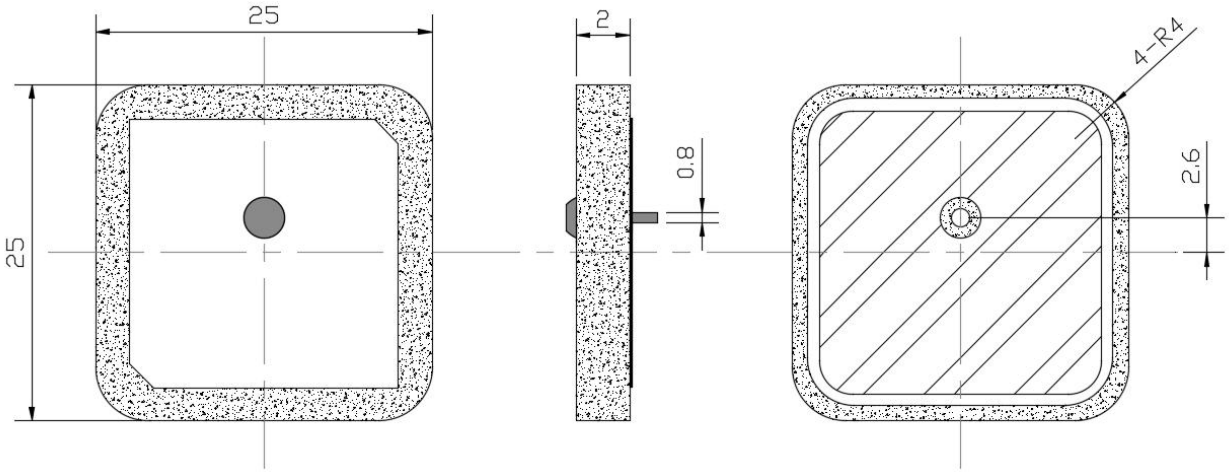
Dimension（mm）