GSC-Tech Corp.
Microwave Group

Patch Antenna

DSP-36-GGB

Appearance

Specification	
Frequency Range	BD：1561.098MHz/GPS：1575.42MHz/GLONASS：1602MHz
V.S.W.R	≤2.0
Gain	5dBic typical
Axial Ratio	5dB max
Polarization	Right-hand circular polarization
Impedance	50Ω
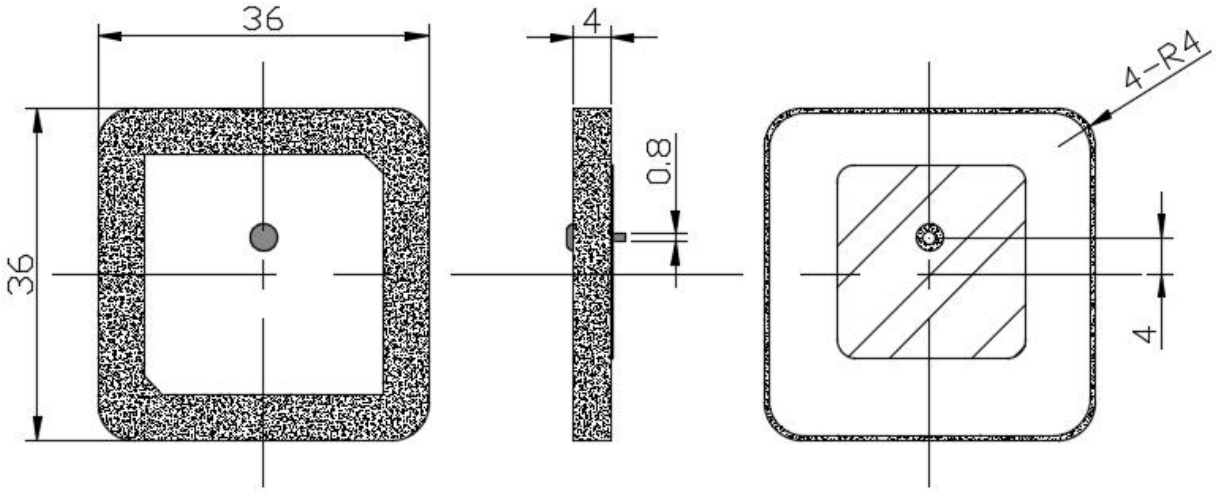
Dimension（mm）